110131 SH 1

| REVISIONS | | | |
|---|---|---|---|
| REV | DESCRIPTION | DATE | APPROVED |
| C | SEE REVISION SHT | 05-10-99 | |

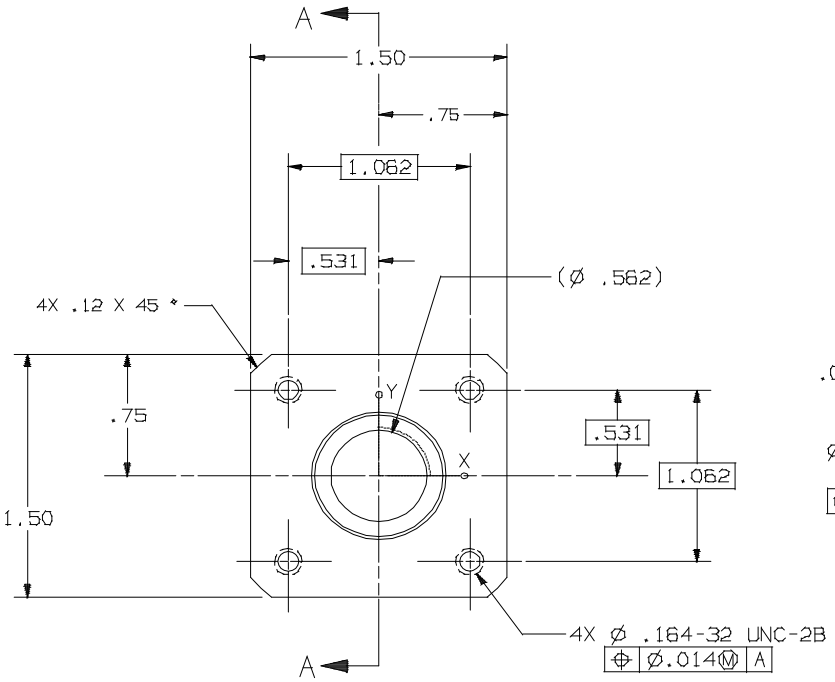


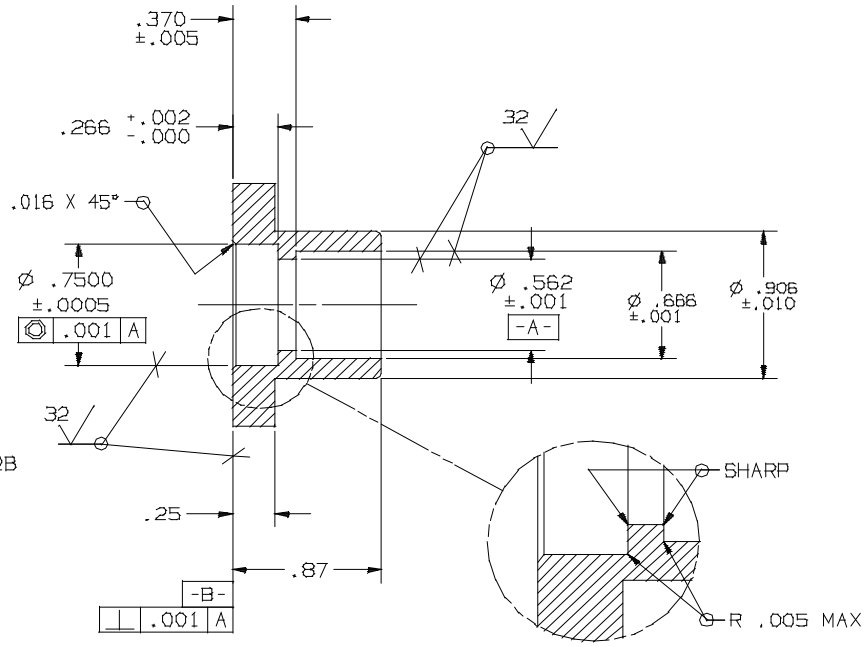


SECTION A-A

NOTES: UNLESS OTHERWISE SPECIFIED.

| UNLESS OTHERWISE SPECIFIED | SIGNATURES | DATE |
|---|---|---|
| DIMENSIONS ARE IN INCHES<br>TOLERANCES-<br>.XX ±.01<br>.XXX ±.002<br>.XXXX ±.<br>ANGLES± 0° 15'<br>SURFACE 63 | DRAWN: L. TOVALIN | 12-24-92 |
| | CHECKED: H. SPIELEDER | 03-15-93 |
| | ENGRG: | |
| | ENGRG: | |
| MATERIAL<br>BRASS, ALY 464 | | |
| FINISH | | |

VERTEX MICROWAVE PRODUCTS, INC.
a subsidiary of VERTEX COMMUNICATIONS CORPORATION
3111 Fujita Street, Torrance, CA 90505-4006

Q-BAND FLANGE,
FEMALE Ø.562

| SIZE | FSCM NO. | DRAWING NO. |
|---|---|---|
| C | 50478 | 110131 |

SCALE: 2/1 SHEET 1 of 1